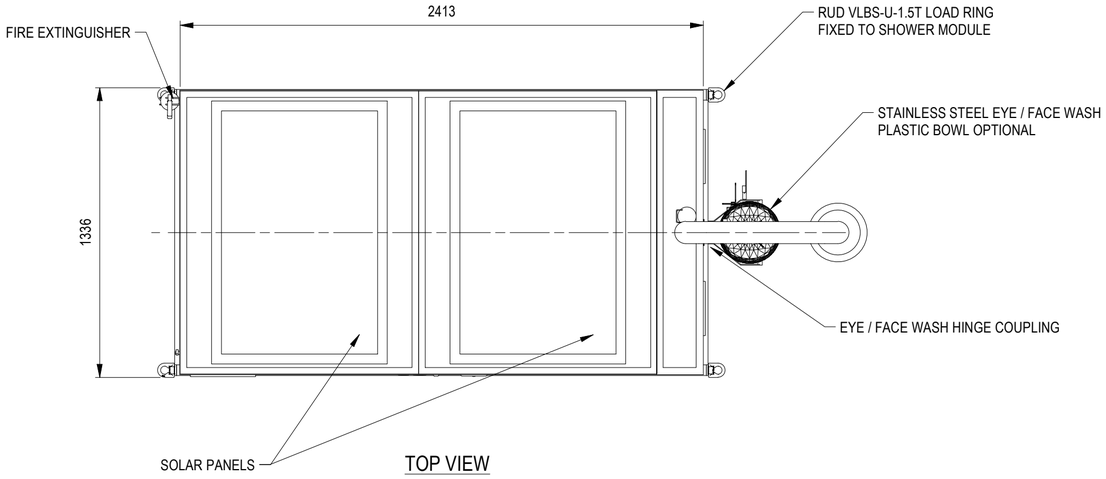

TOP VIEW

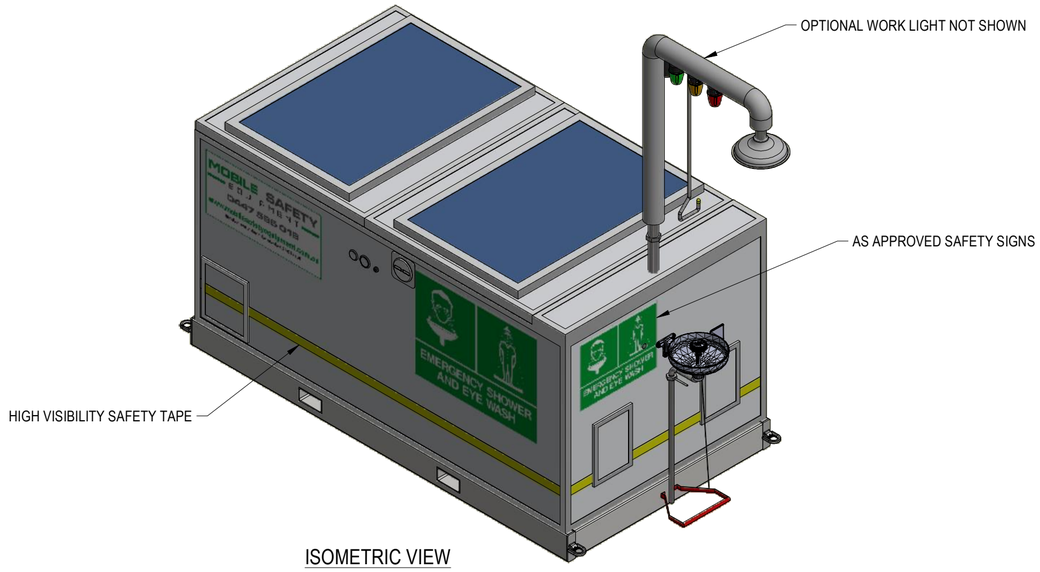

ISOMETRIC VIEW

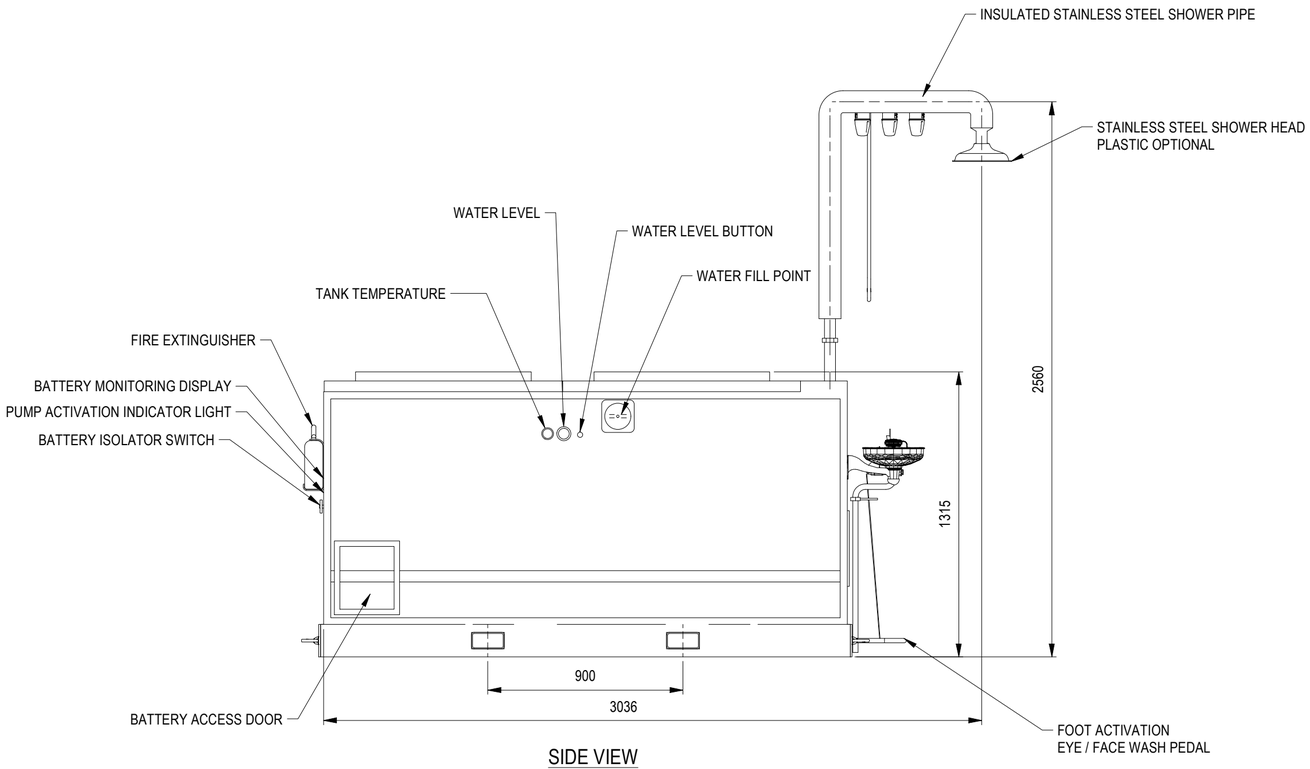

SIDE VIEW

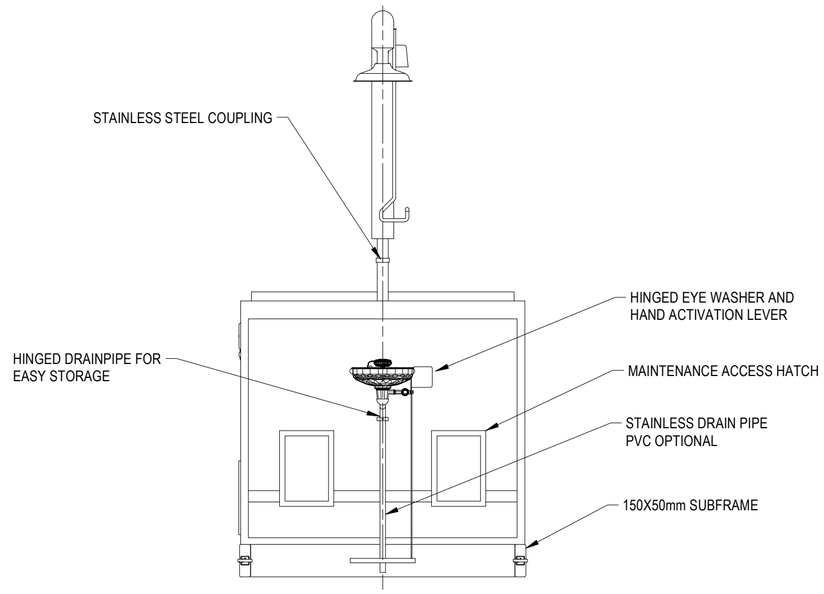

BACK VIEW

ELECTRICAL NOTES:
- CABLE USED FOR PORTABLE SHOWER AND EYEWASH MEETS AS/NZS 1125 STANDARD
- CONDUIT AND GLANDS PROTECTING CABLE MEETS IP68 STANDARD
- ENCLOSURES AND CONNECTORS ARE TO IP67 STANDARD

REV	SHT	ZONE	DESCRIPTION	DRN	CHK	APP	DATE
B			UPDATED AS PER CURRENT DESIGN	NJ	FD	NJ	30/03/2020
A			ISSUED FOR INFORMATION	MdV	RB	RL	16/07/2014

COPYRIGHT ©
THIS DRAWING AND THE CONTENTS DEPICTED OR WRITTEN THEREON, WHETHER IN WHOLE OR IN PART, IS THE EXCLUSIVE INTELLECTUAL PROPERTY OF DEACON ENGINEERS PTY LTD AND MAY NOT BE REPRODUCED OR USED FOR ANY PURPOSE WITHOUT THE EXPRESS WRITTEN APPROVAL OF DEACON ENGINEERS PTY LTD.

3RD ANGLE PROJECTION

DEACON ENGINEERS
deaconengineers.com.au

ALL DIMENSIONS IN mm U.N.O.

SHEET 1 OF 2

SCALE 1:20

TITLE
MOBILE SAFETY EQUIPMENT
SAFETY SHOWER
SKID MOUNTED DELUXE
GENERAL ARRANGEMENT

DRG No 01846-G-3000-SKID MOUNTED DELUXE

REV. B

A2

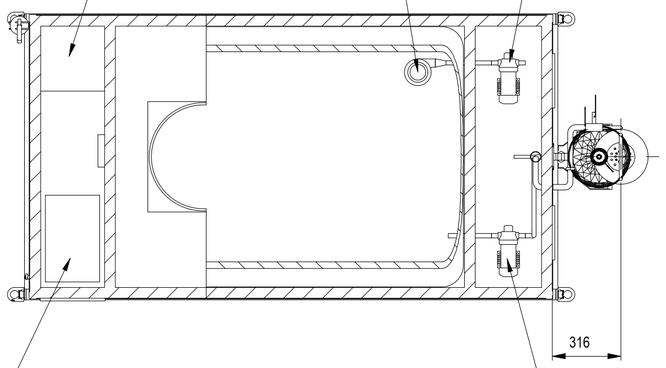

TOP SECTION B-B

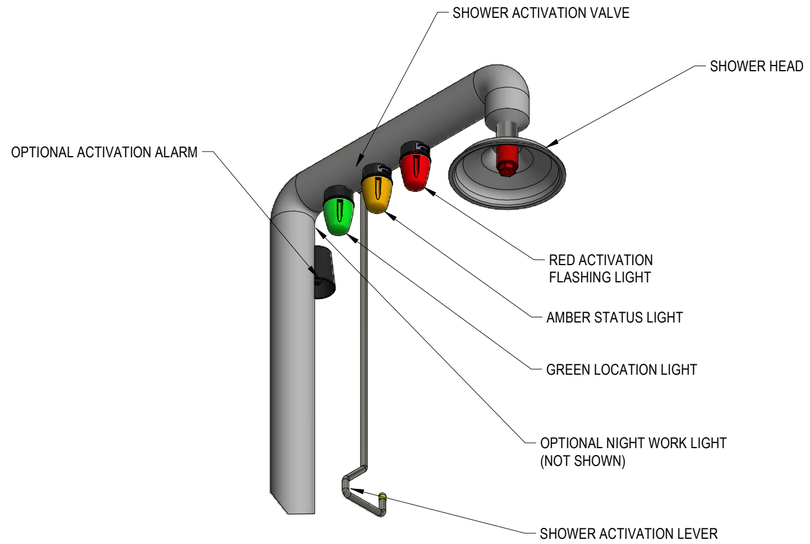

ISOMETRIC VIEW
DETAIL OF TOP OF SHOWER
SCALE 1 : 10

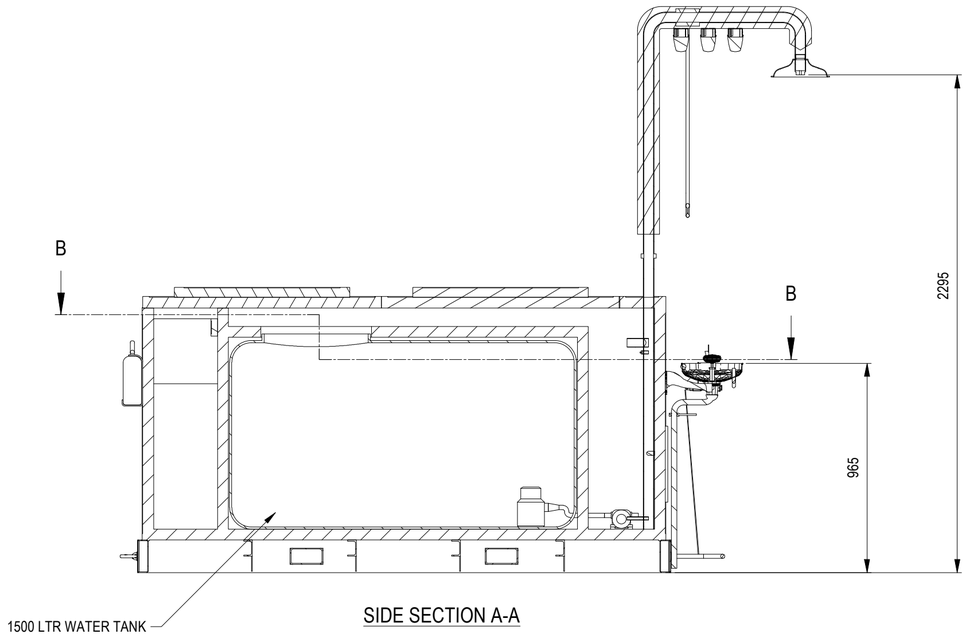

SIDE SECTION A-A

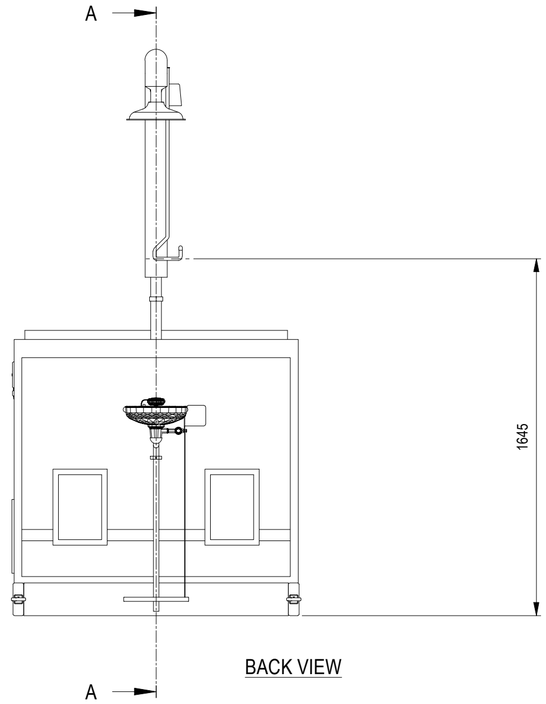

BACK VIEW

NOTE:
ALL INSULATION WALLS 50mm COLORBOND CLAD PANELS.

REV	SHT	ZONE	DESCRIPTION	DRN	CHK	APP	DATE
B			UPDATED AS PER CURRENT DESIGN	NJ	FD	NJ	30/03/2020
A			ISSUED FOR INFORMATION	MdV	RB	RL	16/07/2014

COPYRIGHT ©
THIS DRAWING AND THE CONTENTS DEPICTED OR WRITTEN THEREON, WHETHER IN WHOLE OR IN PART, IS THE EXCLUSIVE INTELLECTUAL PROPERTY OF DEACON ENGINEERS PTY LTD AND MAY NOT BE REPRODUCED OR USED FOR ANY PURPOSE WITHOUT THE EXPRESS WRITTEN APPROVAL OF DEACON ENGINEERS PTY LTD.

3RD ANGLE PROJECTION

DEACON ENGINEERS
deaconengineers.com.au

ALL DIMENSIONS IN mm U.N.O.

SHEET 2 OF 2

SCALE 1:20

TITLE
MOBILE SAFETY EQUIPMENT
SAFETY SHOWER
SKID MOUNTED DELUXE
GENERAL ARRANGEMENT

DRG No 01846-G-3000-SKID MOUNTED DELUXE

REV. B

A2